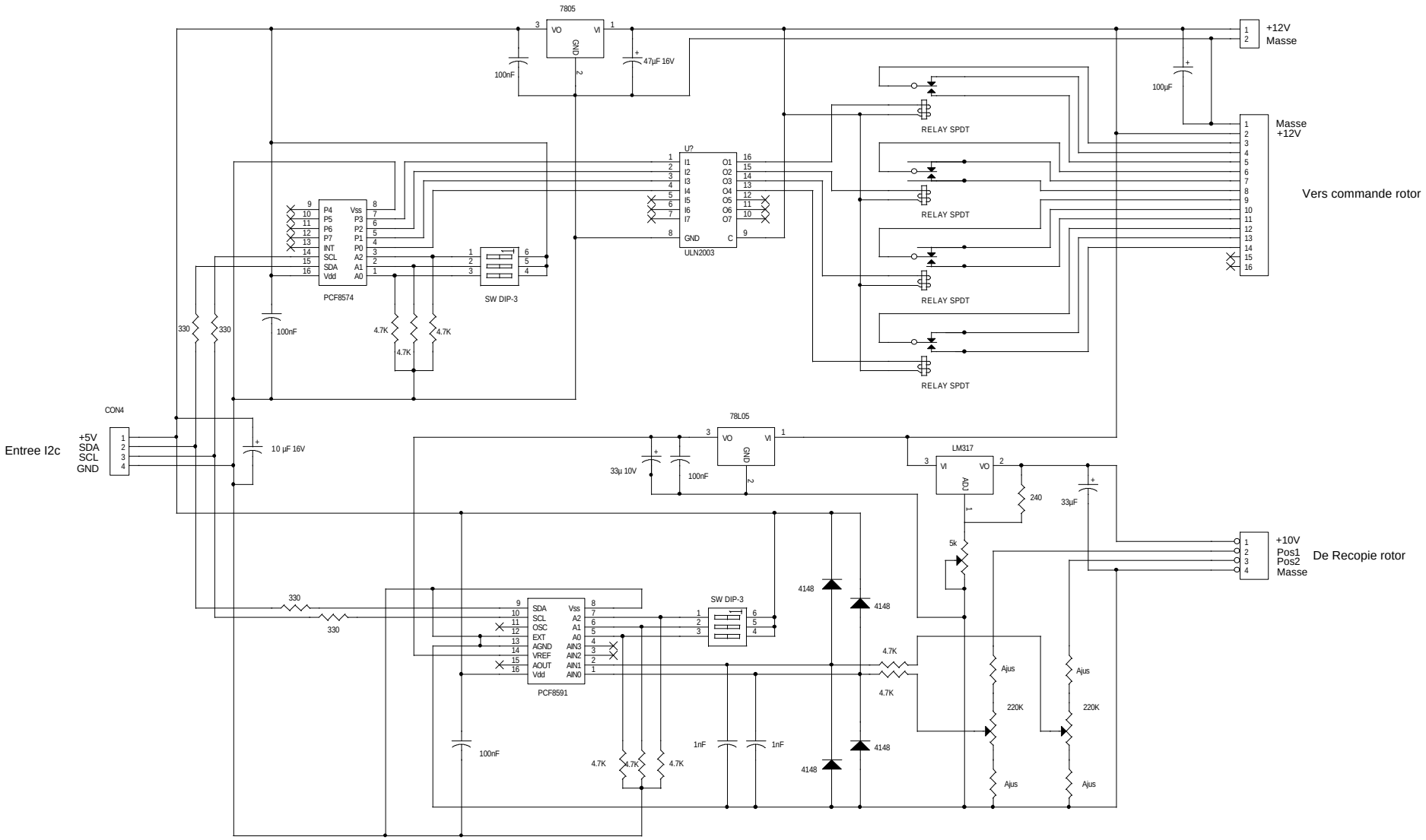

Title: Interface rotor I2c

Size: A3

Document Number

Rev

Date: Wednesday, December 19, 2001

Sheet 1 of 1